EQUIVALENT FORCE SYSTEMS (TUTORIAL SHEET 2)

1. Replace the force and couple system by an equivalent single force and couple acting at point P.

Ans: (a) –0.086i-1.184 kN , 21.6 kN m (b) –270 N, 6885 kN m

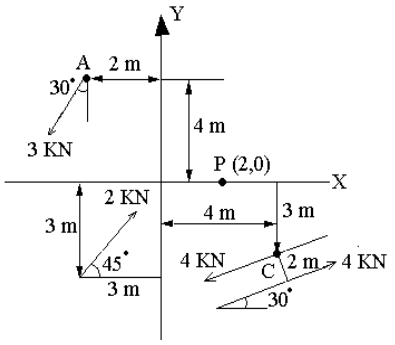

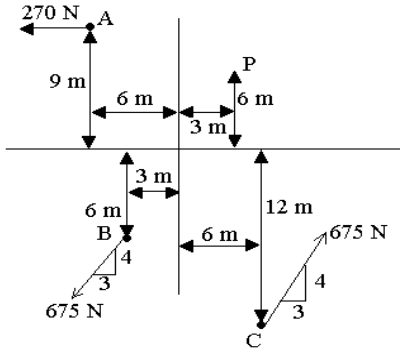

2. Determine the magnitude and direction θ of force F and the couple moment M such that the loading system is equivalent to a resultant force of 600N, acting vertically downward at O, and a clockwise moment of 400 N-m.

Ans: 450.5 N, 27.4^{O}, 1714 N m

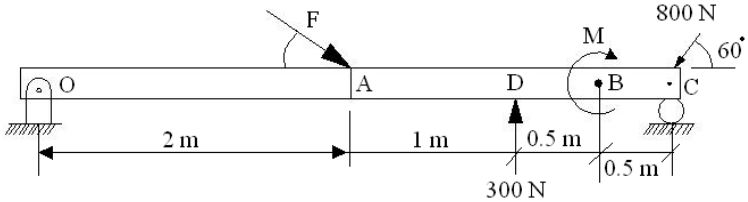

3. The systems of four forces acts on the roof truss determine the resultant force and specify its location along AB measured from point P.

Ans: 1.83m

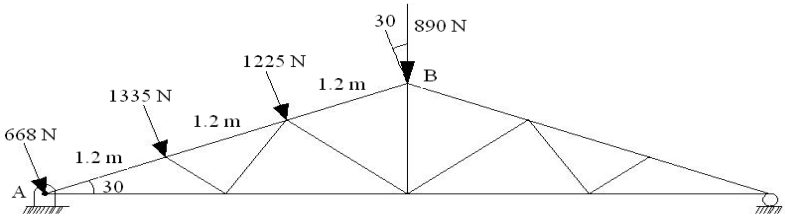

4. A machine component is subjected to the forces shown each of which is parallel to one of the co-ordinate axis. Replace these forces by an equivalent force- couple system at A.

Ans: -300i-240j+25k N, -3i+13.5j+9k N m

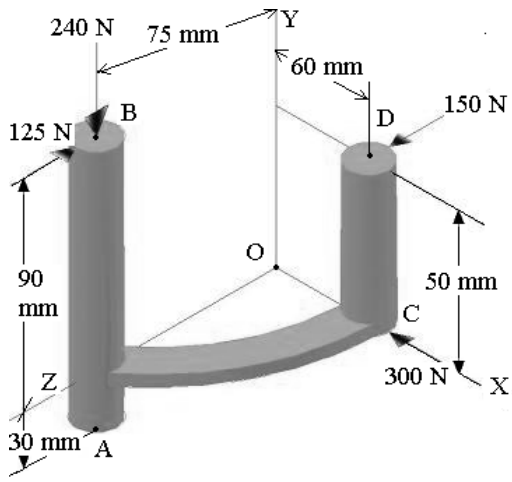

5. Four forces act on a 700mm x 375 mm plate as shown. (a) Find the resultant of these forces. (b) Locate the two points where the line of action of the resultant intersects the edge of the plate.

Ans: -1000i+1200j N, (250,300) from C

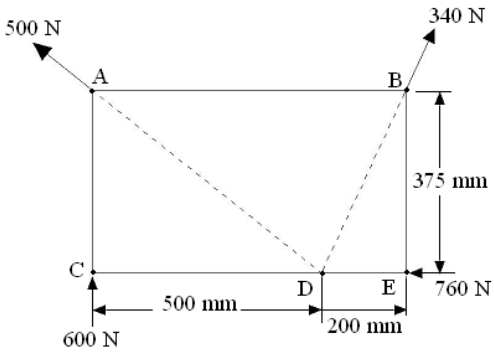

6. A 500- N force is applied to a bent plate as shown. Determine (a) An equivalent force- couple system at B, (b) Equivalent systems formed by a vertical force A and a force at B.

Ans: (a) 500N / 60° , 86 N m (b) A=689 N, B= 1150 / 77.4^o

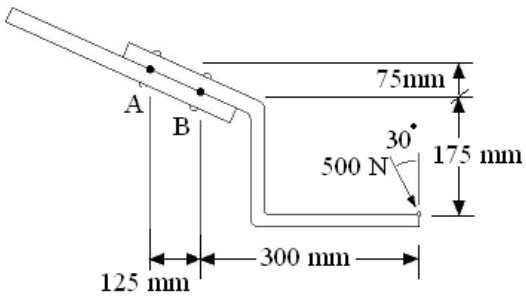

7. A concrete foundation mat of 5-m radius supports four equally spaced columns, each of which is located 4m from the center of the mat. Determine the magnitude and the point of application of the resultant of the four loads.

Ans: 325 N; (-0.92,-0.62)m

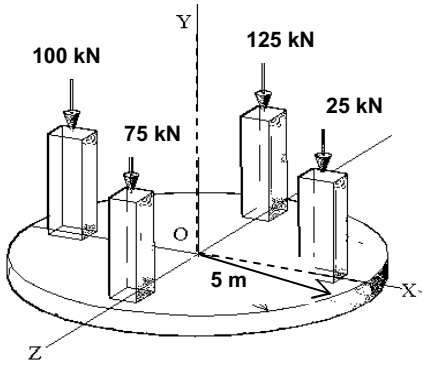

8. A rectangular block is acted upon by the three forces, which are directed along its edges. Replace these forces by an equivalent force system at O and determine the magnitude and the direction of the resultant force R.
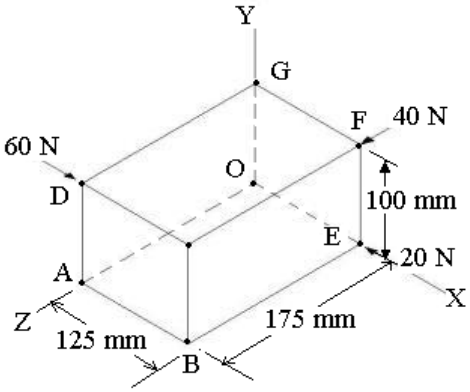
Ans: (4i+5.5j-6k) Nm